PL

OPTIONS AND DIMENSIONS

INDUSTRIAL RANGE

PRANA 340S

● recuperators

Use the QR code or visit the website: http://prana.help/p023 to overview useful infor-mation such as ventilation system information, owner's manual and other.

- Read all safety information carefully to ensure safe and proper use of the device.

MODEL RANGE: PRANA 2022®

CONTENTS

• The ventilating system can be used by children aged 8 years and older and by people with physical, sensory, mental disabilities or lack of experience and knowledge if they are supervised or instructed to operate the unit in a safe manner and understand the hazards involved in its use. Do not allow children to play with the ventilation system.

Installation, cleaning, and maintenance should not be performed by children.

• The fan inside the device rotates during operation. Avoid putting foreign objects inside the device during operation. Doing so may result in personal injury.

• The unqualified user must not install, move, dismantle, modify or repair the ventilation system himself.

• Begore the use make sure that the installation complies with the mechanical and electrical regulations which are in force in the country where the installation was carried out.

• Do not install heating equipment for air intake by a ventilation system.

Incomplete combustion products can cause an accident.

• Installation by unqualified people can result in poor performance, damage to the ventilation system, and accidents.

• If the ventilation system is used in the same room as other ventilation systems in operation, the performance of the unit may differ from the stated performance.

• The presence of excessive wind pickup can affect the performance of the ventilation system.

• Avoid damaging of the ventilation system.

• Warnings and precautions when installing the PRANA ventilation system are described in the installation manual.

• If the heating elements from a third party supplier are connected to the PRANA system control unit, the manufacturer is not responsible for the proper operation of both devices.

The heating elements, which may (optionally) be supplied by the manufacturer, undergo a technical preparation stage for proper operation.

• The air conveyed must not contain combustible or explosive mixtures, chemically active vapors, sticky substances, fibrous materials, coarse dust, soot, grease or media that promote the formation of harmful substances (poison, dust, pathogens).

• The unqualified user must not install, move, dismantle, modify or repair the ventilation system himself.

• Before installation, make sure that there is no mechanical damage to the structure and fasteners.

• If damage occurs, immediately de-energize the system with a circuit breaker.Continued use may cause smoke, fire, electric shock or injury.

Contact the manufacturer's service center or dealer in your area for repair.

• It is not allowed to mount the connection heater with the box downwards (danger of condensation and short-circuiting of the wiring).

• Do not twist, damage or change the power cord. Do not expose it to heat or place heavy objects on it. Doing so may cause a fire or an electric shock.

• Do not block the intake or exhaust air passages as this will reduce the performance of the system and could result in stopping and/or smoke, fire, electric shock or injury.

• The recuperator is connected by means of insulated strong conductors (cables, wires) with a cross-section of 0.5-0.75mm2. All wiring must be installed by a qualified electrician in accordance with the Electrical Installations Code.

• Heaters must be installed in a duct of similar diameter (size). The minimum allowable distance between heater and recuperator is at least 0.5 m of metal duct.

• The duct heaters are designed for a minimum airflow rate of 1.5 m/s and a maximum exhaust air operating temperature of 40 °C.

• Before performing any maintenance operations, de-energize the unit (turn off the main power switch and wait for the fans to of the fans to stop completely).

• Heaters cannot be insulated with thermal insulation materials.

• The manufacturer is not responsible for the installation that is carried out by an unqualified specialist (or group of specialists) and all subsequent consequences connected with it.

Incorrect installation will invalidate the warranty.

• The air ducts must be equipped with grills or other device preventing free access to the fans.

• To avoid reverse draught in rooms where fireplaces, gas heaters and other equipment producing or different gas mixtures are in operation, the "Separate control" mode must not be used.

• PRANA-340S TYPE1 - Indoor module with using 200 mm side spigots for circular duct connection. The front center spigot of the system with 200 mm diameter is used to connect the supply air duct in the room, and the rear center spigot with 200 mm diameter to connect the exhaust air duct from the room;

• PRANA-340S TYPE2 - Indoor module with the use of side spigots with a diameter of 200 mm to connect the circular duct. The front center spigot of the system with a diameter of 200 mm is used to connect the exhaust duct in the room, and the rear center spigot with a diameter of 200 mm to connect the air intake duct from the street;

• PRANA-340S TYPE3 - Wall module with side spigots of 200 mm diameter to connect the circular duct. The system's front 200 mm center spigot is used to connect the room supply air duct, and the rear 200 mm center spigot is used to connect the exhaust air duct from the room;

• PRANA-340S TYPE4 - Indoor module with side spigots use 204x60 mm for the connection of a rectangular duct.
The front center spigot of the system with a 204x60 mm is used to connect the supply duct to the room, and the rear center spigot with a diameter of 200 mm is used to connect the exhaust duct from the room;

• PRANA-340S TYPE5 - Indoor module using side spigots 204x60 mm diameter used to connect the rectangular duct.

The front center spigot of the system with a 204x60 mm is used to connect the exhaust duct in the room, and the rear center spigot with a diameter of 200 mm is used to connect the air intake duct from the street;

- PRANA-340S TYPE6 - Wall module PRANA-340S with the use of side spigots 204x60 mm for connecting a rectangular duct. The front center spigot of the system with a 204x60 mm is used to connect the supply duct in the room, while the rear center spigot, 200 mm in diameter, is used to connect the exhaust air duct from the room;

- PRANA-340S TYPE7 - Wall module PRANA - 340S without using side spigots for duct connection, air intake is made through a 40 mm wide slot, along the outside diameter of the casing.

PRANA-340S TYPE1 - Indoor module with using 200 mm side spigots for circular duct connection. The front center spigot of the system with 200 mm diameter is used to connect the supply air duct in the room, and the rear center spigot with 200 mm diameter to connect the exhaust air duct from the room;

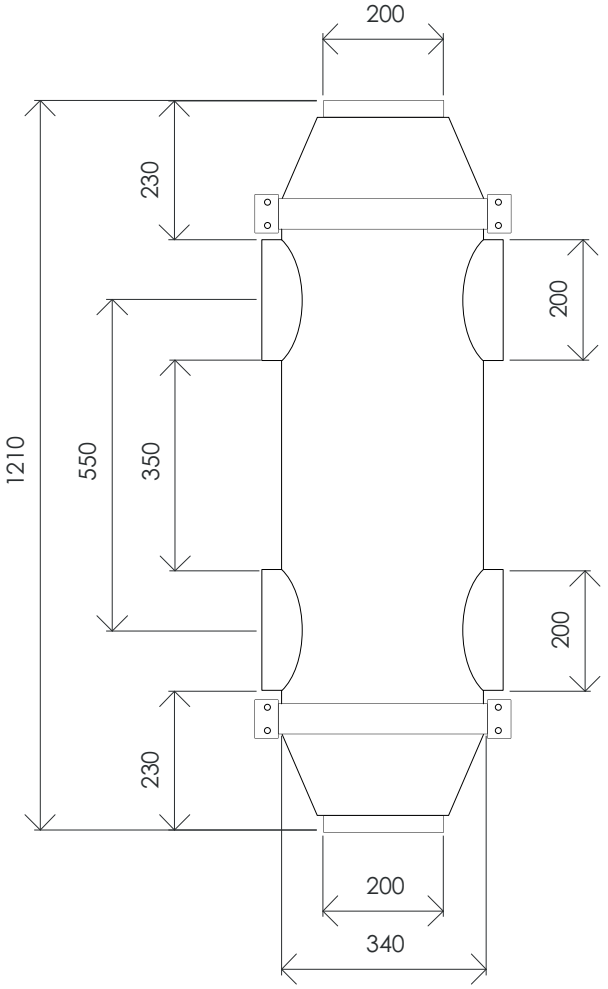

Main dimensions. Top view.

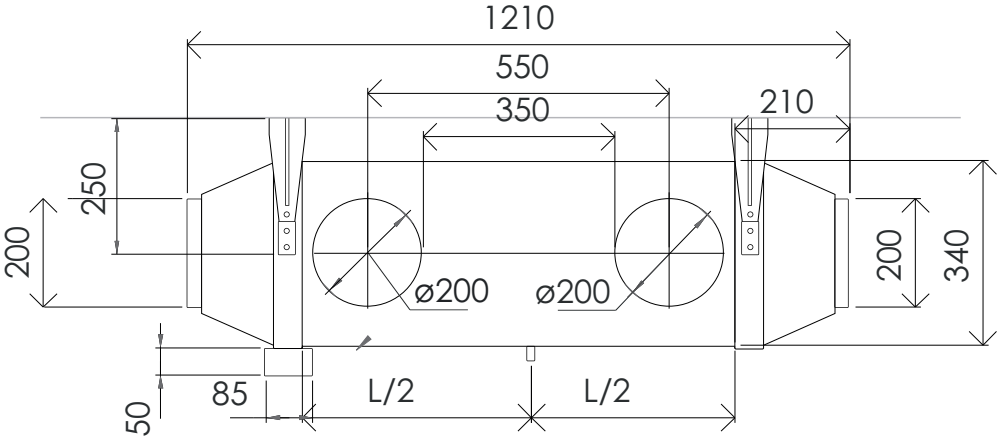

The main dimensions. Side view.

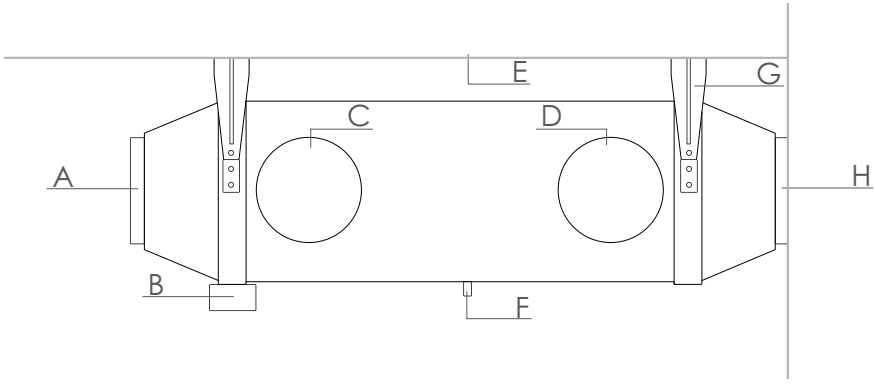

A-Inflow of air into the room
B-Terminal box
C-Room air intake Ø200 mm
D-Energy intake Ø200 mm Ø200 mm

E-Building ceiling
F-Condensate drain pipe Ø10 mm
G-System brackets
H-Exhaust air outlet to the outside Ø200 mm

The main dimensions. Side view.

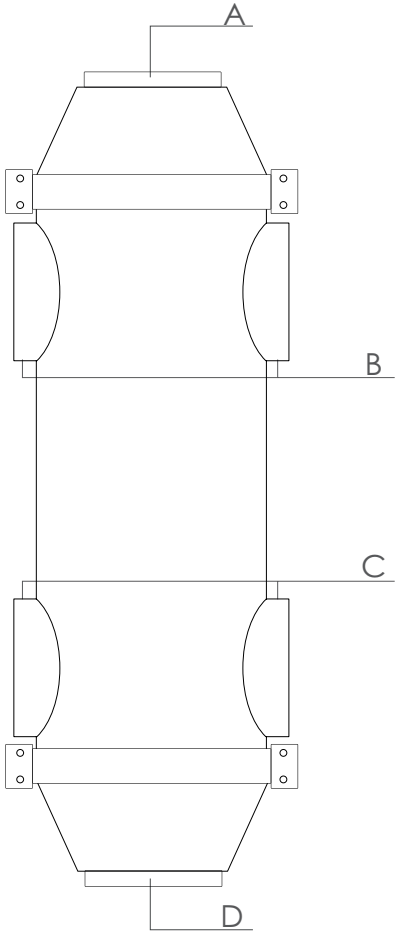

A-Inflow of air into the room.
B-Room air intake. Use the necessary (and) or install a blanking plug. Use one/two Ø200 mm required connections.
C-External air intake Ø200 mm. Use the required (and) or install a blanking plug. Use one/two Ø200 mm connection(s).
D-Exhaust air discharge to the outside.

Assignment of system connections. Top view.

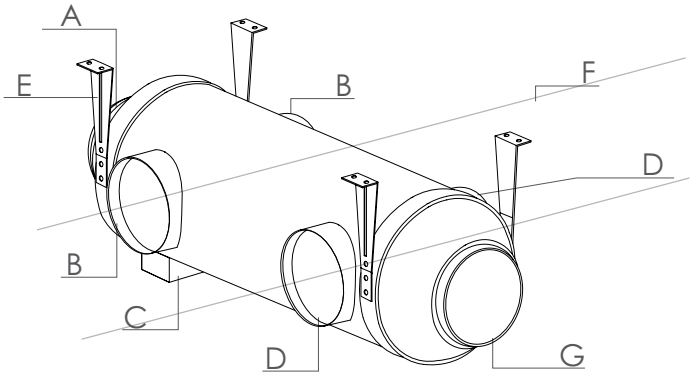

A-Room air inflow Ø200mm.
B-Air intake from room Ø200 mm.
C-Control box.
D-External air intake Ø200 mm.
E-System fixing.
F-Covering of the building.
G-Exhaust air outlet to the outside Ø200 mm.

Assignment of system connections. Isometric diagram.

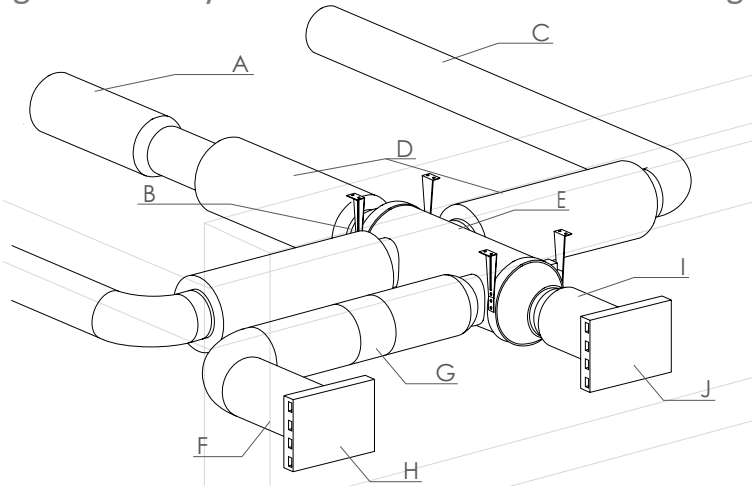

A-P2 Ø250 mm
B-Installation of flexible insertion Ø200 mm
C-B4 Ø250 mm
D-Muffler Ø200/250 mm
E-PRANA -340S
F-P1 Ø200/250 mm
G-Filter box Ø200/250 mm
H-Outer grille P1
I-B3 Ø200/250 mm
J-External grille B3

Exterior placement. Isometric scheme.

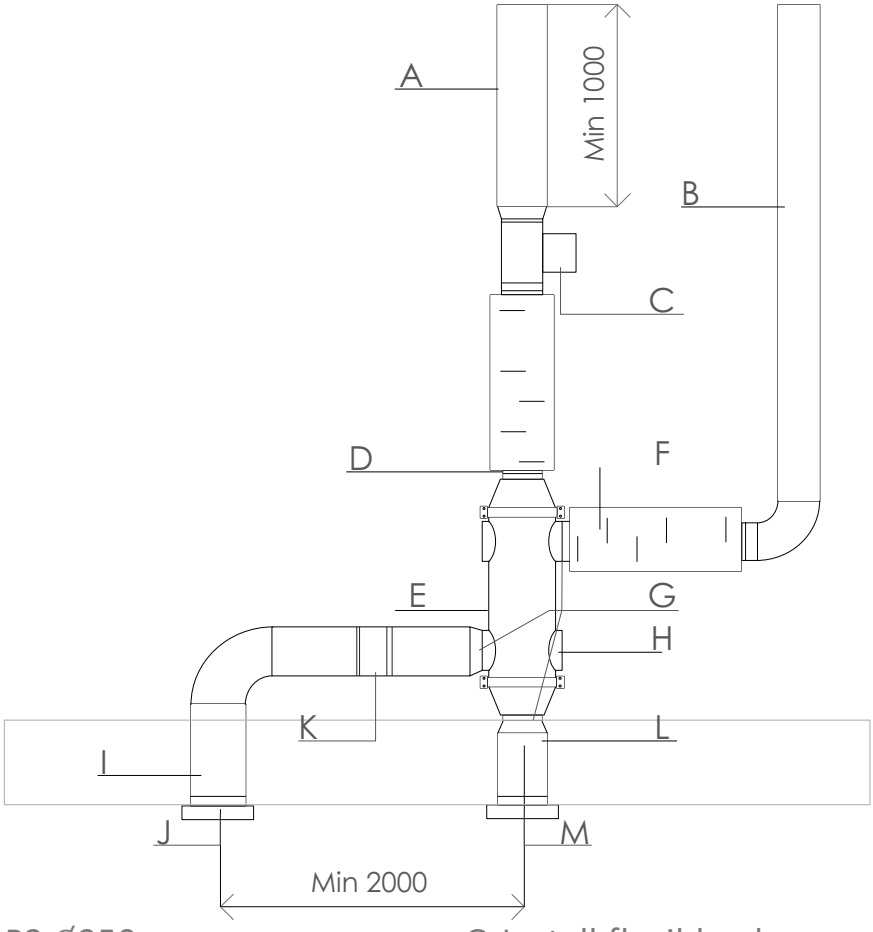

A-P2 Ø250 mm
B-B4 Ø250 mm
C-Electric duct heater Ø200/250 mm
D-Install flexible insertion Ø200 mm
E-PRANA -340S
F-Muffler Ø200/250 mm
G-Install flexible plug Ø200 mm
H-Insert plugs Ø200 mm
I-P1 Ø200/250 mm
J-Interior grid P1
K-Filter box Ø200/250 mm
L-B3 Ø200/250 mm
M-External grille B3

Recommended connection diagram for ducts.
1 connection.

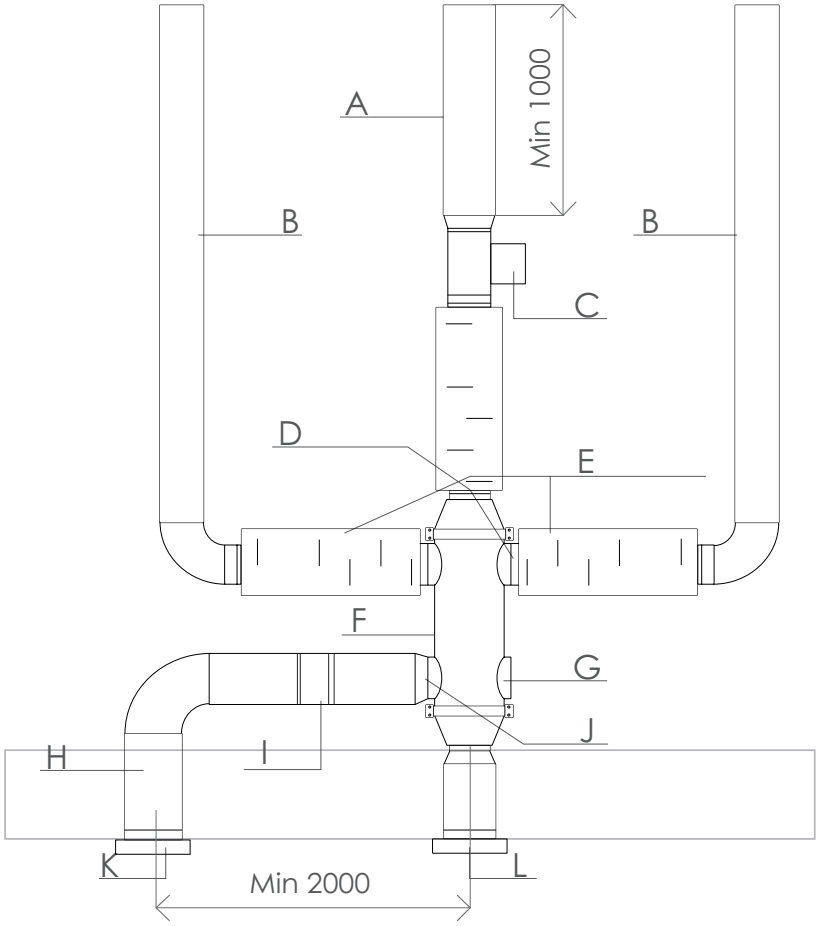

L-External grille B3
D-Install flexible connector Ø200 mm
G-Insert blanking plug Ø200 mm
I-Filter box Ø200/250 mm.
F-PRANA-340S mm
E-Muffler Ø200/250

J-B4 Ø200 mm
C-Electric duct heater Ø200/250 mm
A-P2 Ø250 mm
H-P1 Ø200/250 mm
K-External grille P1

Recommended connection diagram of the air ducts.
2 connections.

PRANA-340S TYPE2 - Indoor module with the use of side spigots with a diameter of 200 mm to connect the circular duct. The front center spigot of the system with a diameter of 200 mm is used to connect the exhaust duct in the room, and the rear center spigot with a diameter of 200 mm to connect the air intake duct from the street;

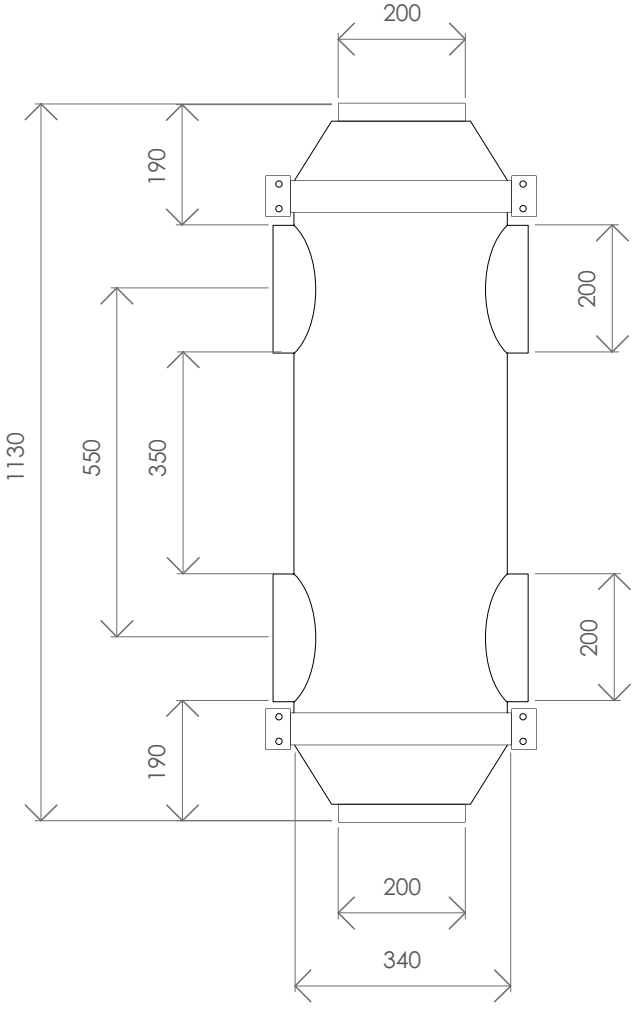

Main dimensions. Top view.

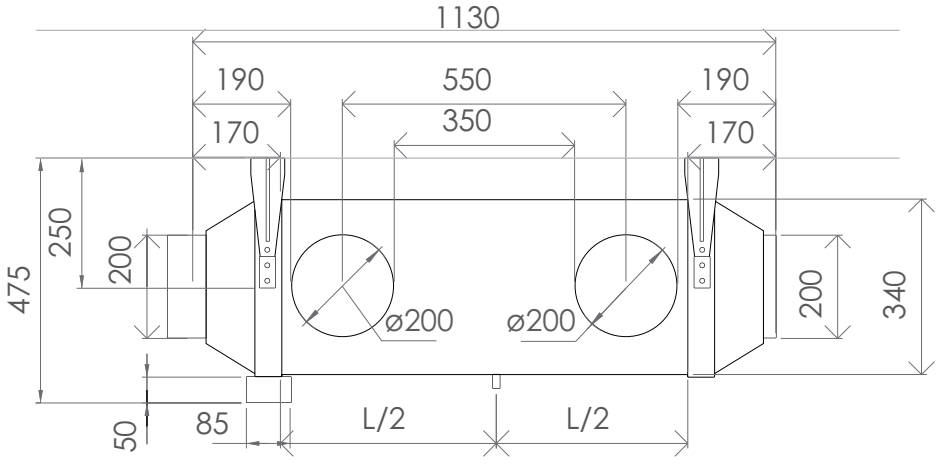

The main dimensions. Side view.

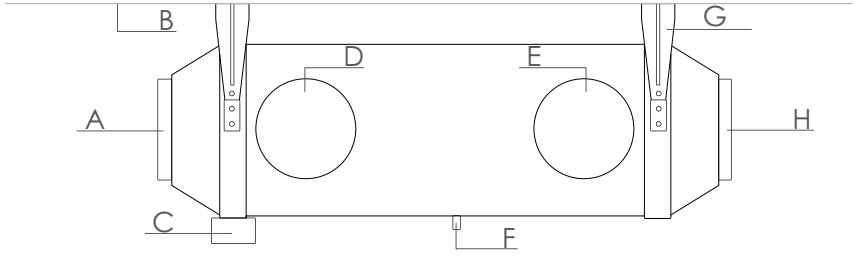

A-Fence from room Ø200 mm
B-Building ceiling
C-Terminal box
D-Enhalation of air into Ø200 mm
E-Exhaust air outlet to the outside Ø200 mm
F-Condensate drain pipe Ø10 mm
G-System brackets
H-Box for outside air Ø200 mm

Assignment of connections of the system. Side view.

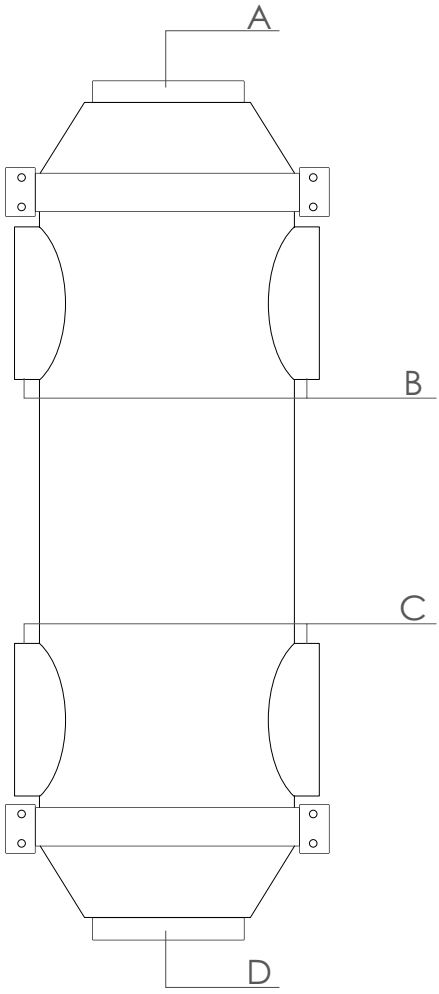

A-Extract air from Ø200 mm
B-Room air inlet Ø200 mm
C-Exhaust air outlet to the outside Ø200 mm
D-Exhaust air intake Ø200 mm

Assignment of system connections. Top view.

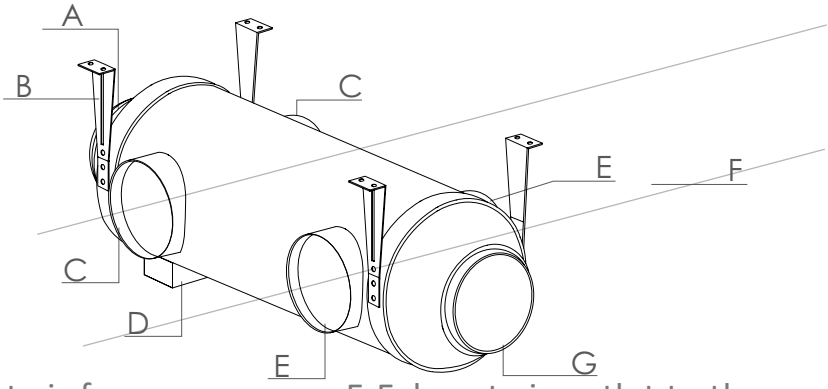

A-Extract air from Ø200 mm
B-System bracket
C-Room air inlet Ø200 mm
D-Terminal box
E-Exhaust air outlet to the outside Ø200 mm
F-Building ceiling
G-Exhaust air intake Ø200 mm

Assignment of system connections. Isometric diagram.

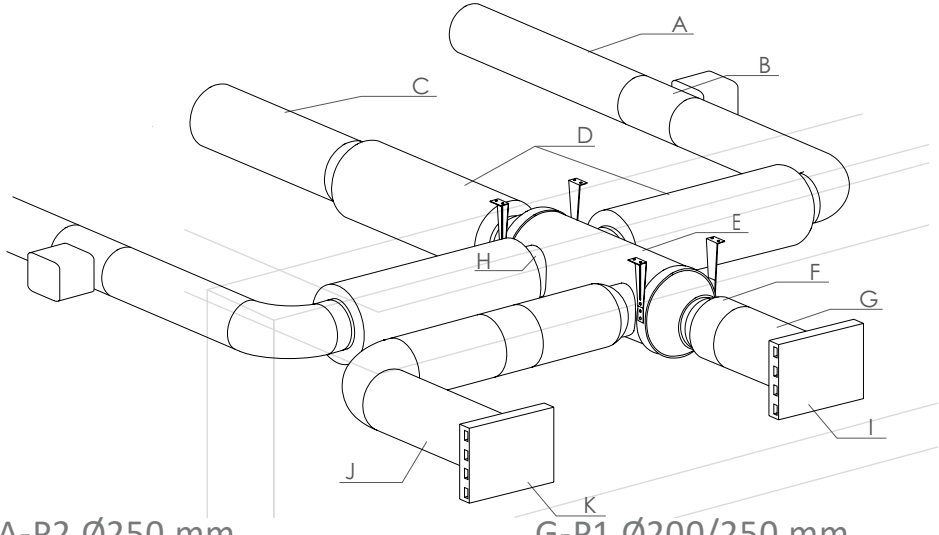

A-P2 Ø250 mm
B-Electric duct heater Ø200/250 mm
C-B4 Ø250 mm
D-Muffler Ø200/250 mm
E-PRANA -340S
F-Filter box Ø200/250 mm
G-P1 Ø200/250 mm
H-Install flexible insert Ø200 mm
I-External grid P1
J-B3 Ø200/250 mm
K-External grille B3

External positioning. Isometric scheme.

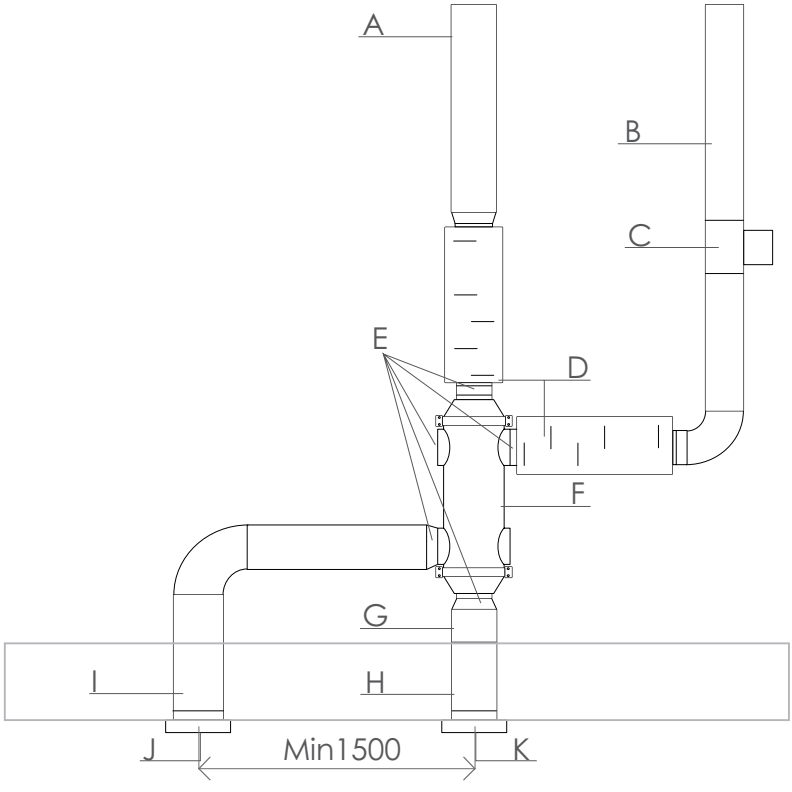

A-B4 Ø250 mm
B-P2 Ø250 mm
C-Electric heater
Ø200/250 mm
D-Muffler Ø200/250 mm
E-Install flexible insert
Ø200 mm

F-PRANA -340S
G-Filter box
Ø200/250 mm
H-P1 Ø200/250 mm
I-B3 Ø200/250 mm
J-External grille B3
K-External grille P1

Duct connection diagram. 1 connection.

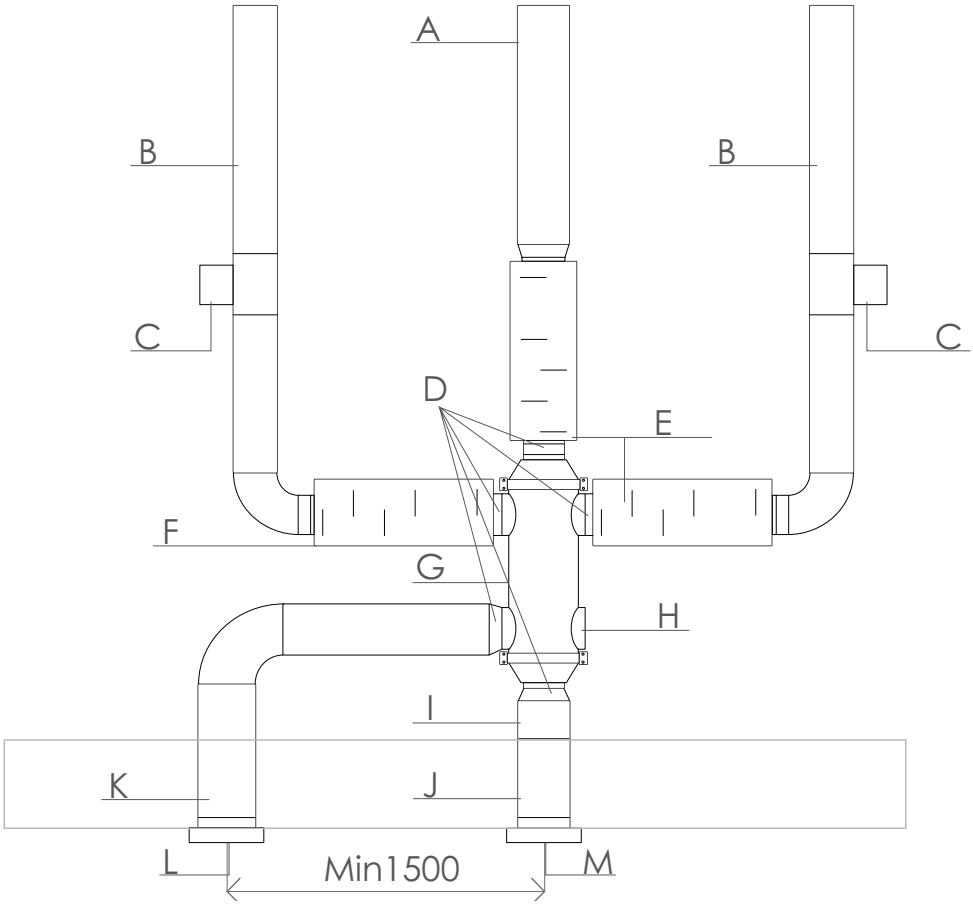

A-B4 Ø250 mm
B-P2 Ø200 mm
C-Electric duct heater Ø200/250 mm
D-Insert the flexible insertion piece Ø200 mm
E-Insert plug Ø200 mm
F-Muffler Ø200/250 mm
G-PRANA -340S
H-Mounting plug Ø200 mm
I-Filter box Ø200/250 mm
J-P1 Ø200/250 mm
K-B3 Ø200/250 mm
L-External grille B3
M-External grille P1

Duct connection diagram. 2 connections.

PRANA-340S TYPE3 - Wall module with side spigots of 200 mm diameter to connect the circular duct. The system's front 200 mm center spigot is used to connect the room supply air duct, and the rear 200 mm center spigot is used to connect the exhaust air duct from the room;

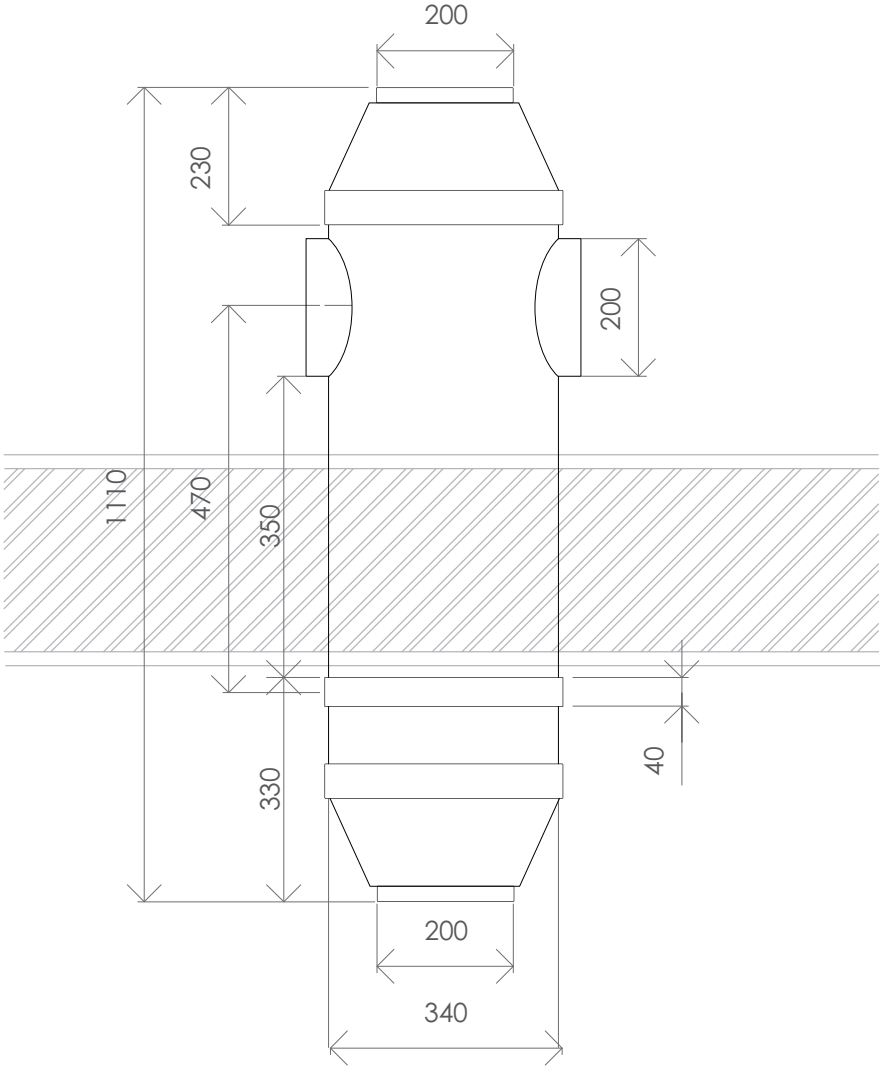

Main dimensions. Top view.

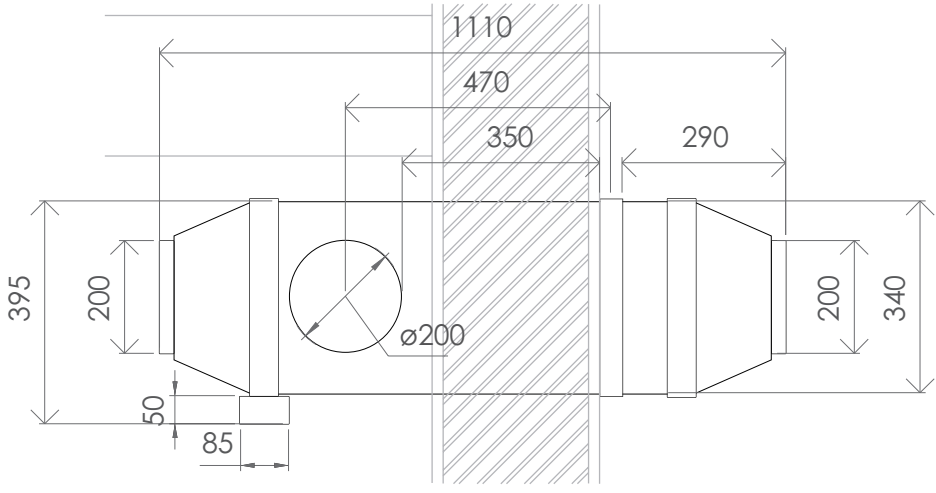

Main dimensions. Side view.

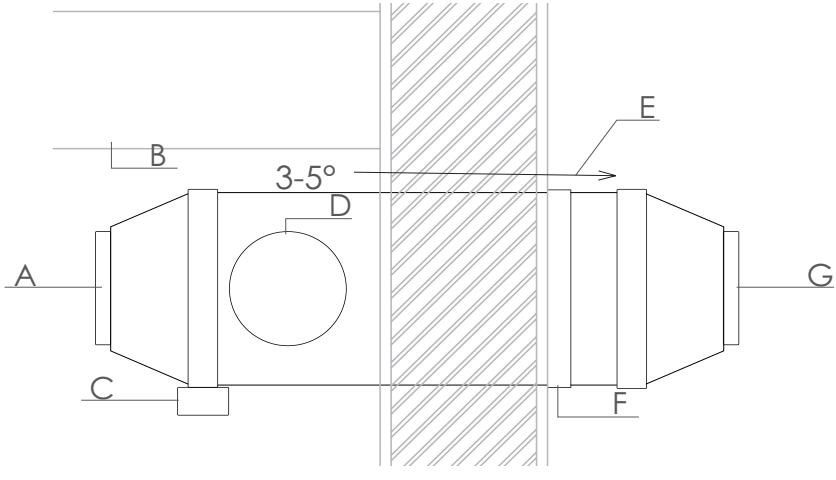

A-Inflow of air into the room
B-room air intake Ø200 mm
C-Condensate drain
D-Exhaust air to the outside Ø200 mm
E-Terminal box
F-Building ceiling
G-Provide slope to street side. Slit 40 mm

System connection assignment. Side view.

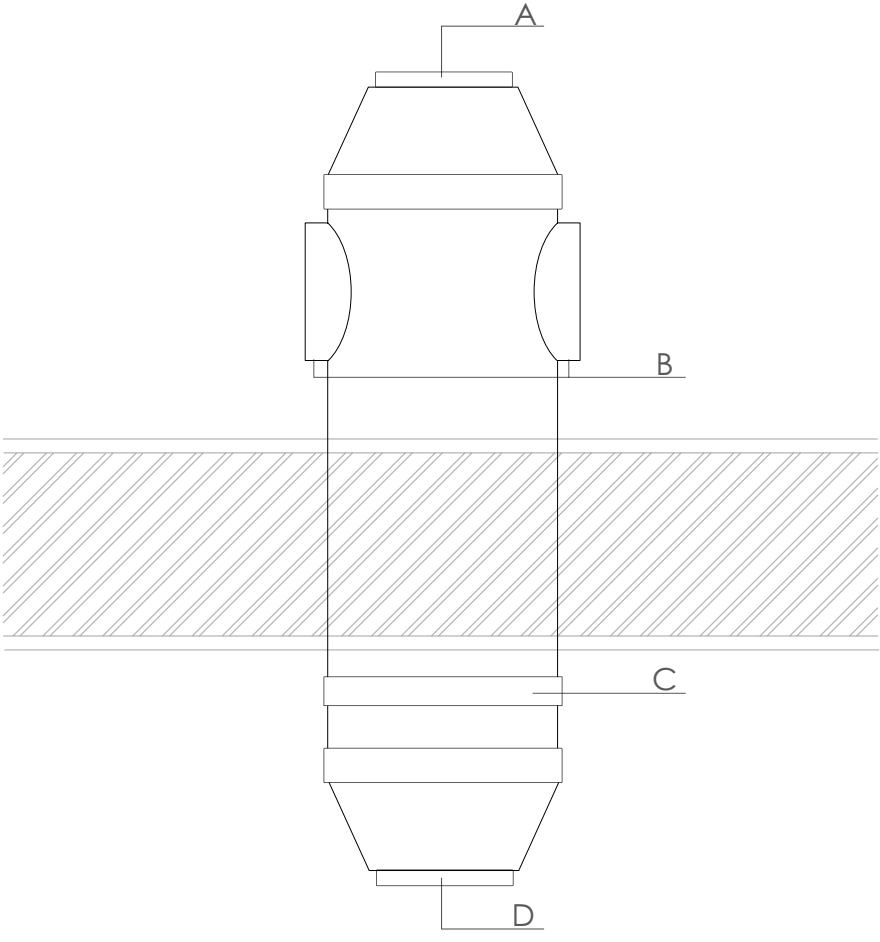

A-Inflow of air into the room
B-Room air intake Ø200 mm

C-Energy intake. Slit 40 mm
D-Exhaust air outlet to the outside Ø200 mm

Purpose of system connections. Top view.

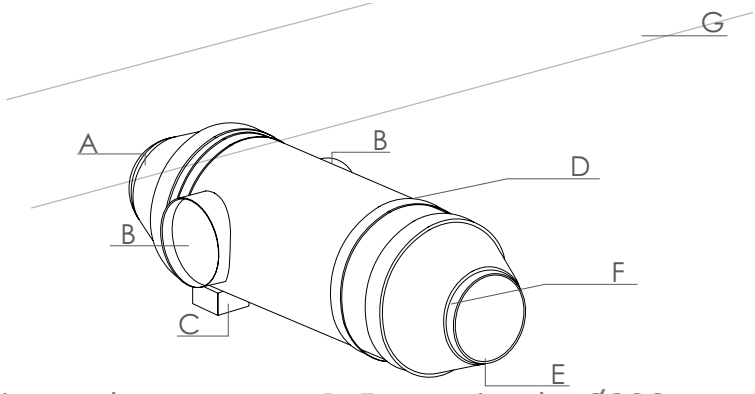

A-Room air supply Ø200 mm
B-Room air intake Ø200 mm
C-Terminal box
D-Energy intake Ø200 mm. Slit 40 mm
E-Exhaust air outlet to the outside Ø200 mm
F-Ensure slope towards to the street
G-External wall

Assignment of system connections. Isometric diagram.

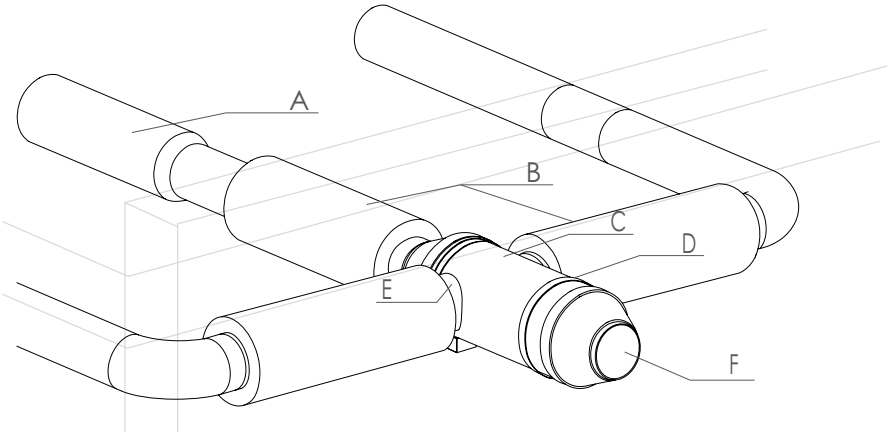

A-P2 Ø250 mm
B-Muffler Ø200/250 mm
C-PRANA -340S
D-P1 Slot 40 mm
E-Insert plugs Ø200 mm
F-B3 Ø200 mm

External placement. Isometric diagram.

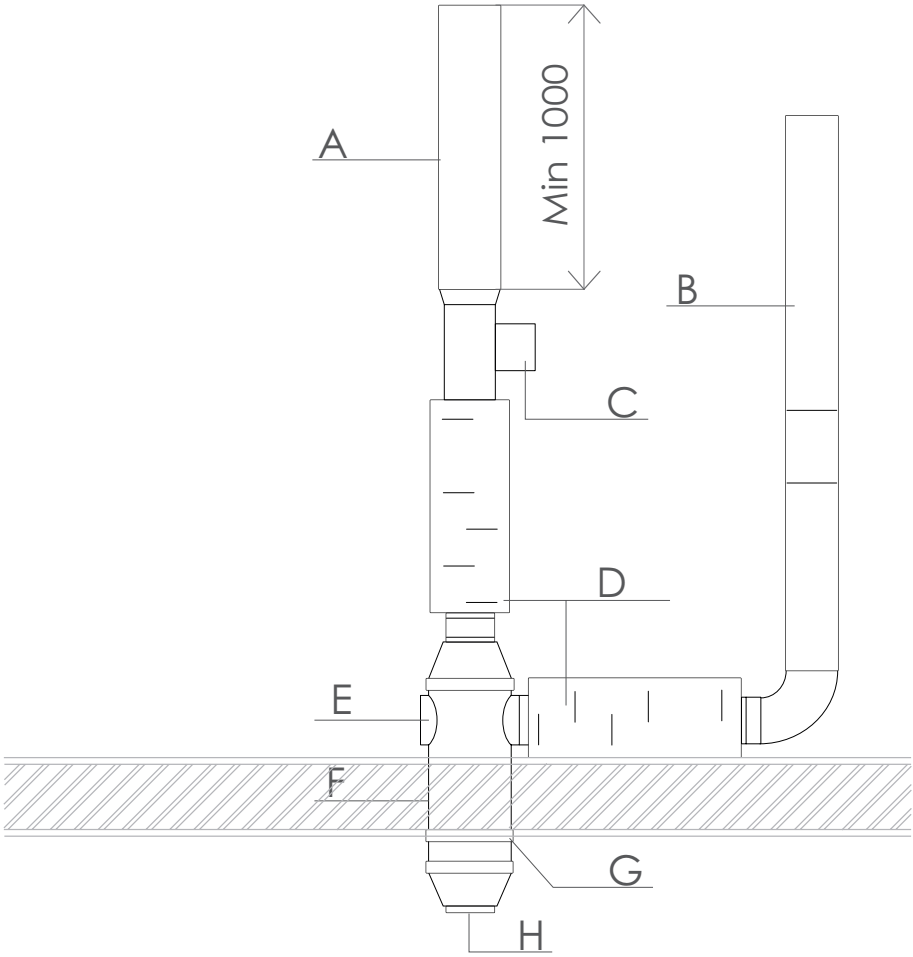

A-B3 Ø200 mm
B-P1 Slit 40 mm
C-Mounting plugs Ø200 mm
D-Muffler Ø200/250 mm

E-PRANA -340S
F-Electric duct heater Ø200/250 mm
G-B4 Ø250 mm
H-P2 Ø250 mm

Recommended duct connection diagram.
1 connection.

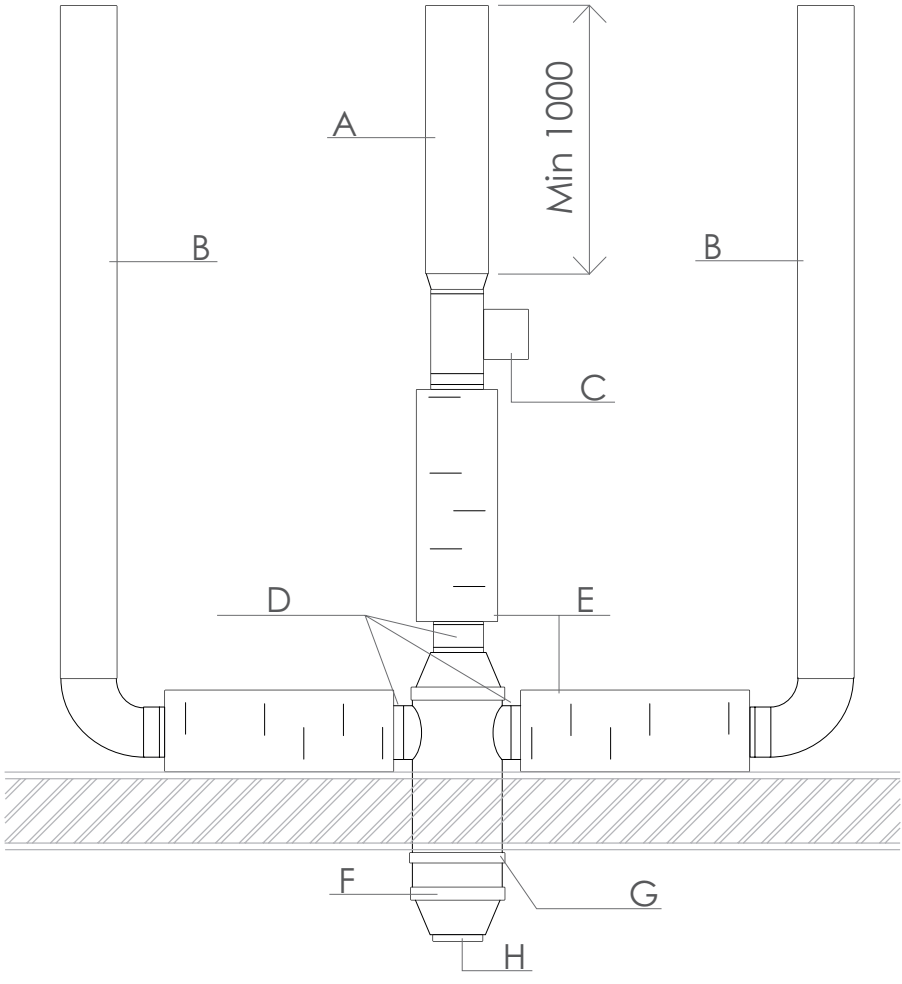

A-P2 Ø250 mm
B-B4 Ø200 mm
C-El. duct heater
Ø200/250 mm
D-Install flexible
Ø200 mm flexible insert

E-Muffler Ø200/250 mm
F-PRANA -340S
G-P1 Slot 40 mm
H-B3 Ø200/250 mm

Recommended duct connection diagram.
2 connections.

PRANA-340S TYPE4 - Indoor module with side spigots use 204x60 mm for the connection of a rectangular duct.

The front center spigot of the system with a 204x60 mm is used to connect the supply duct to the room, and the rear center spigot with a diameter of 200 mm is used to connect the exhaust duct from the room;

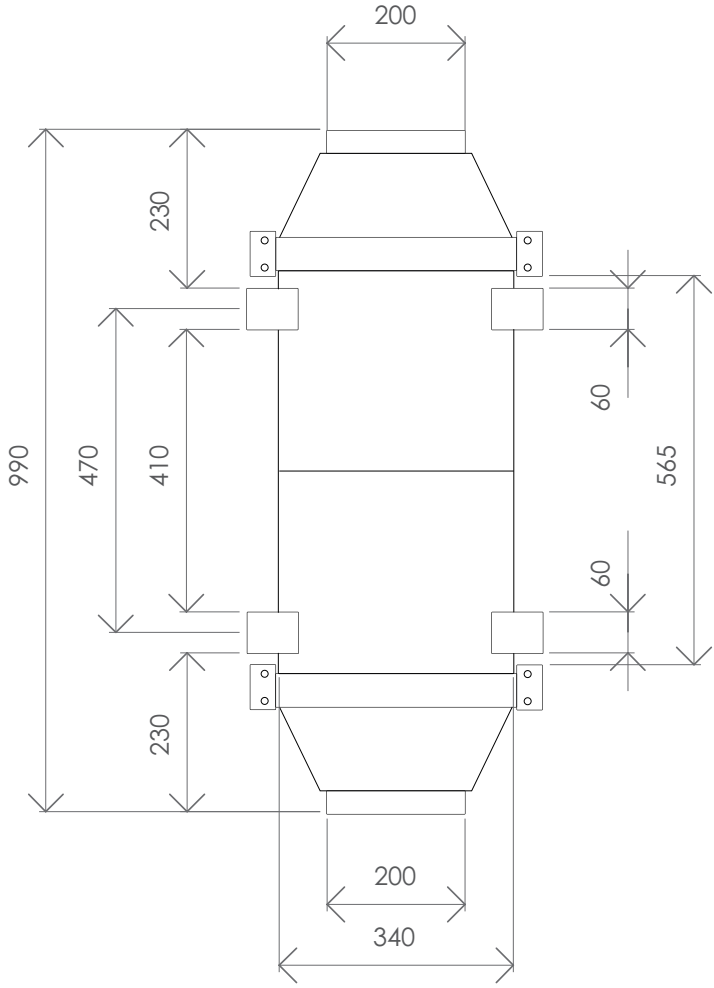

Main dimensions. Top view.

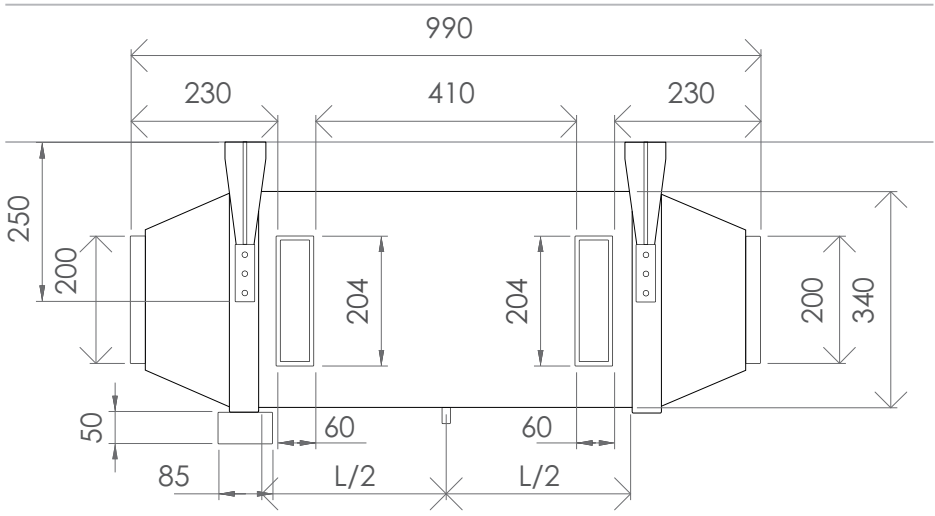

Main dimensions. Side view.

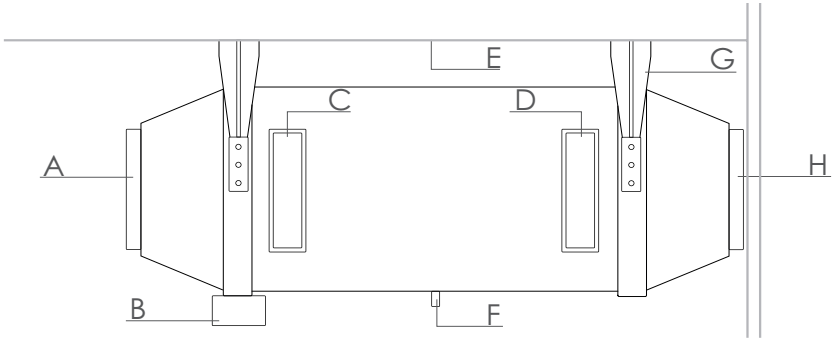

A-Room air inflow.
B-Terminal box
C-Room air intake
204x60 mm
D-External air intake
204x60 mm

E-Building ceiling
F-Pipe for condensate
10 mm condensate pipe
G-System brackets
H-Exhaust air outlet to the
outside Ø200 mm

Assignment of system connections. Side view.

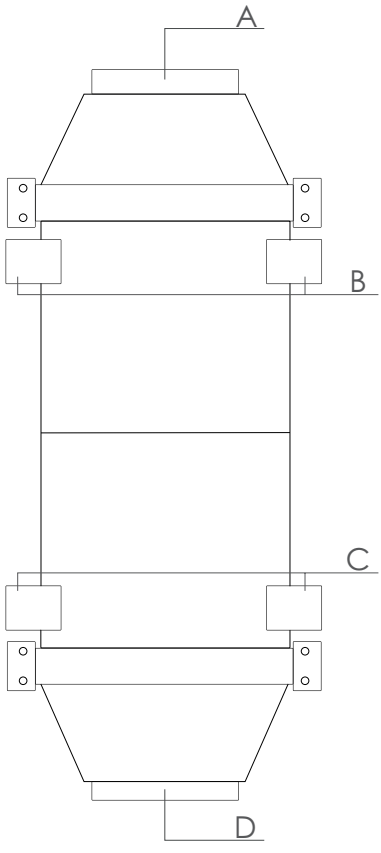

A-Inflow of air into the room.
B-Intake from the room 204x60 mm. Use the necessary one (and) or install a blanking plug. Use one/two necessary connections 204x60 mm.
C-External air intake 204x60 mm.
Use the required (and) or install a blanking plug. Use one/two 204x60 mm required connections.
D-External leakage.

System connection assignment. Top view.

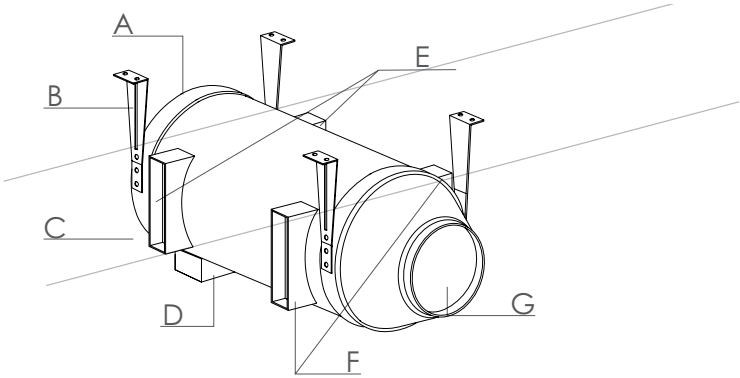

A-Room air inlet Ø200 mm
B-System fixing
C-Building envelope
D-Terminal box

E-Room air intake Ø204x60 mm
F-External air intake 204x60 mm
G-Extract air outlet to the street Ø200 mm

Assignment of connections of the system. Isometric diagram.

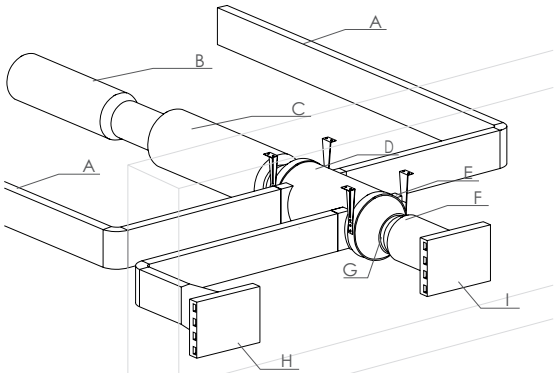

A-B4 204x60 mm
B-P2 Ø250 mm
C-Muffler Ø200/250 mm
D-PRANA -340S
E-Mounting plug 204x60 mm

F-B3 Ø200/250 mm
G-Fit flexible insert Ø200 mm
H-External grille P1
I-External grille B3

External positioning. Isometric diagram.

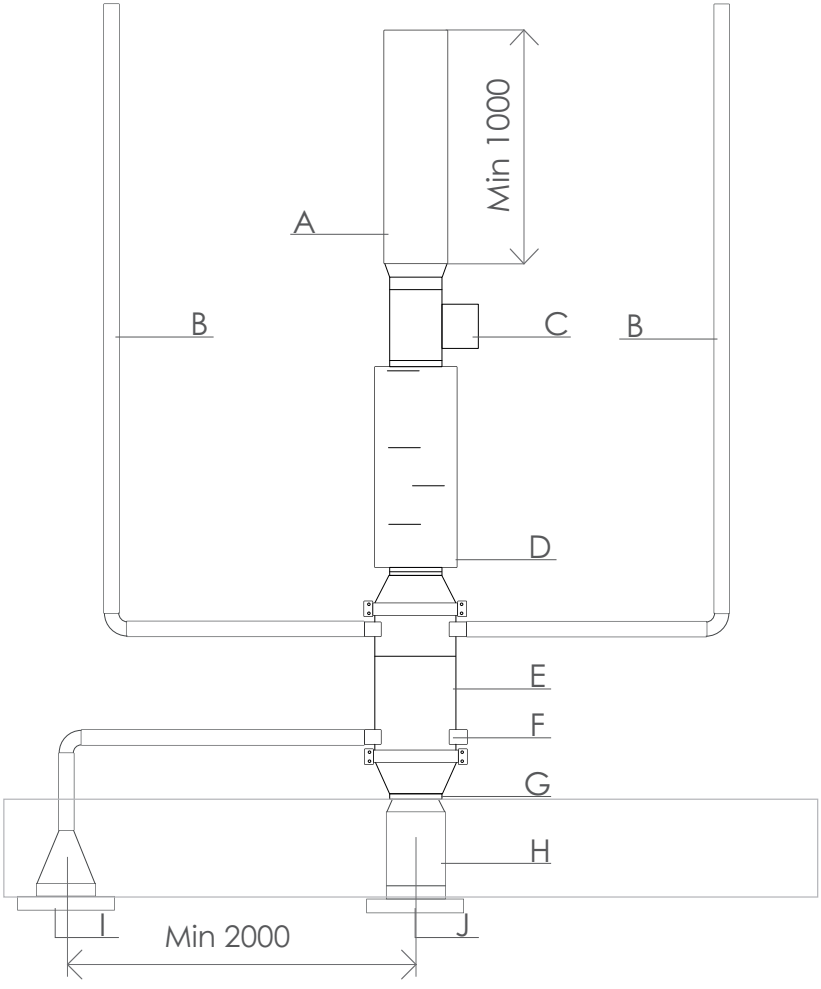

A-P2 Ø250 mm
B-B4 204x60 mm
C-Electric duct heater Ø200/250 mm
D-Silencer Ø200/250 mm
E-PRANA -340S
F-Mounting plug 204x60 mm
G-Insert flexible insert Ø200 mm
H-B3 Ø200/250 mm
I-External grille P1
J-External grille B3

Recommended duct connection diagram.
1 connection.

PRANA-340S TYPE5 - Indoor module using side spigots 204x60 mm diameter used to connect the rectangular duct. The front center spigot of the system with a 204x60 mm is used to connect the exhaust duct in the room, and the rear center spigot with a diameter of 200 mm is used to connect the air intake duct from the street;

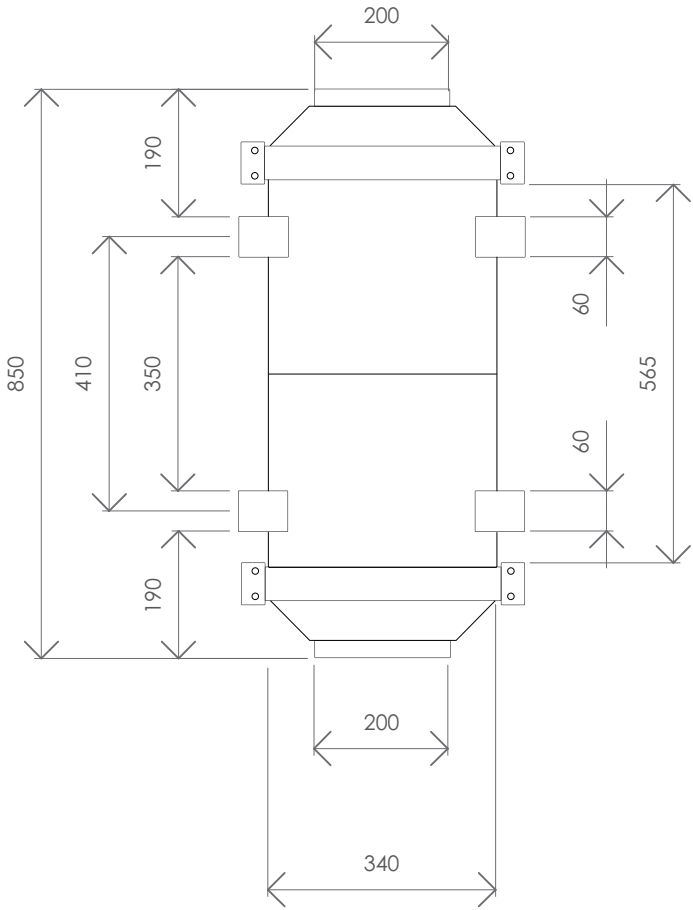

Main dimensions. Top view.

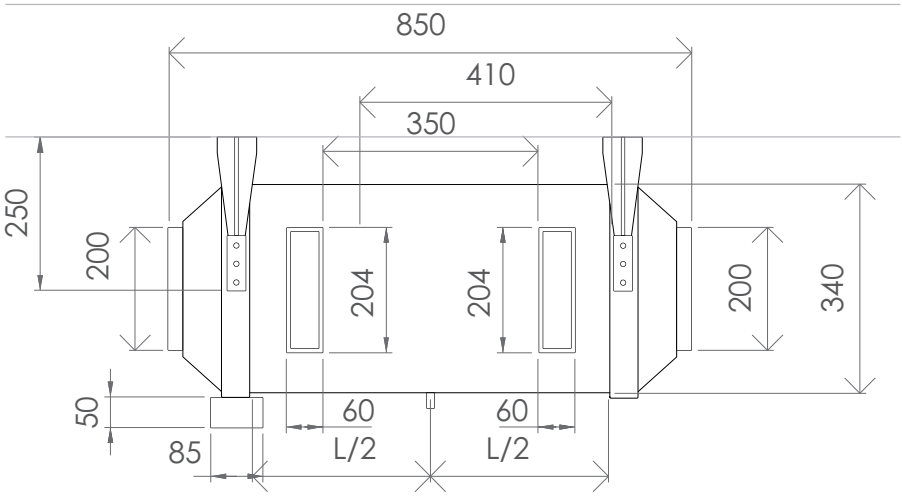

Main dimensions. Side view.

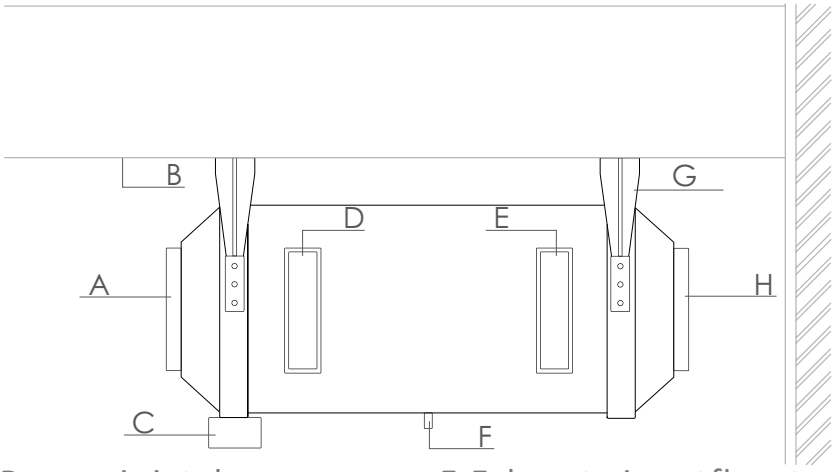

A-Room air intake Ø200 mm
B-Building ceiling
C-Terminal box
D-Inlet airflow into 204x60 mm
E-Exhaust air outflow to the street 204x60 mm
F-Condensate pipe Ø10 mm
G-System brackets
H-External air intake Ø200 mm

Assignment of connections of the system. Side view.

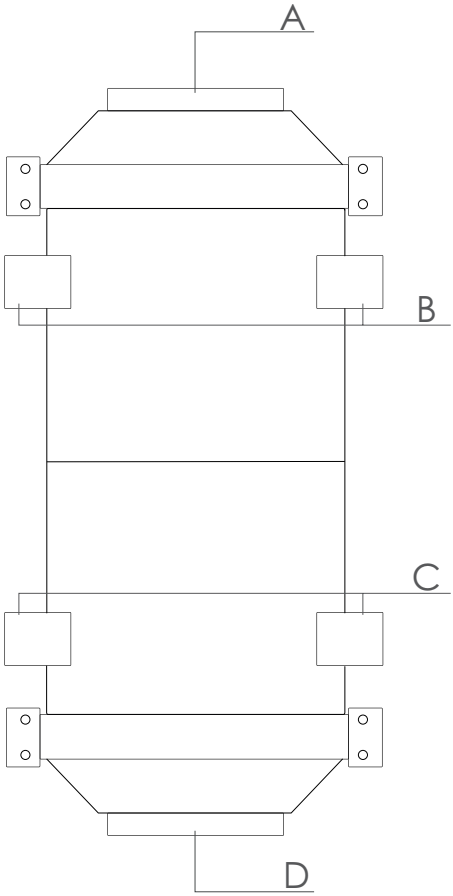

A-Room air intake Ø200 mm
B-Room air inlet Ø204x60 mm.
Use the necessary one (and) or install a blanking plug.
C-Exhaust air outlet to the outside 204x60 mm. Use the necessary (and) or install a blanking plug.
D-Outdoor air intake Ø200 mm.

Assignment of system connections. Top view.

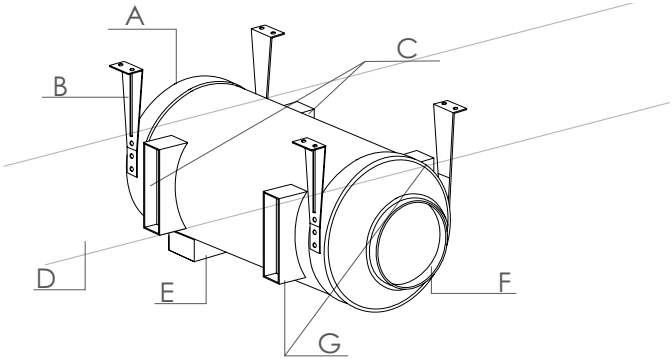

A-Room air intake Ø200 mm
C-Room air inlet 204x60 mm
G-Exhaust air outflow to the street 204x60 mm
E-Terminal box
B-System bracket
D-Building ceiling
F-External air intake Ø200 mm

Assignment of system connections. Isometric diagram.

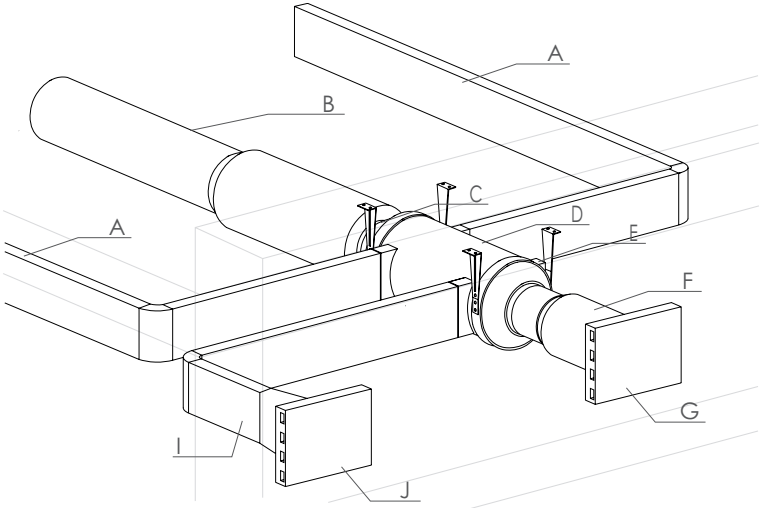

A-P2 204x60 mm
B-B4 Ø250 mm
C-Installation of flexible insertion Ø200 mm
D-PRANA -340S
E-Insert plug 204x60 mm
F-P1 Ø200/250 mm
G-External grille P1
I-B3 204x60 mm
J-External grille B3

Exterior placement. Isometric scheme.

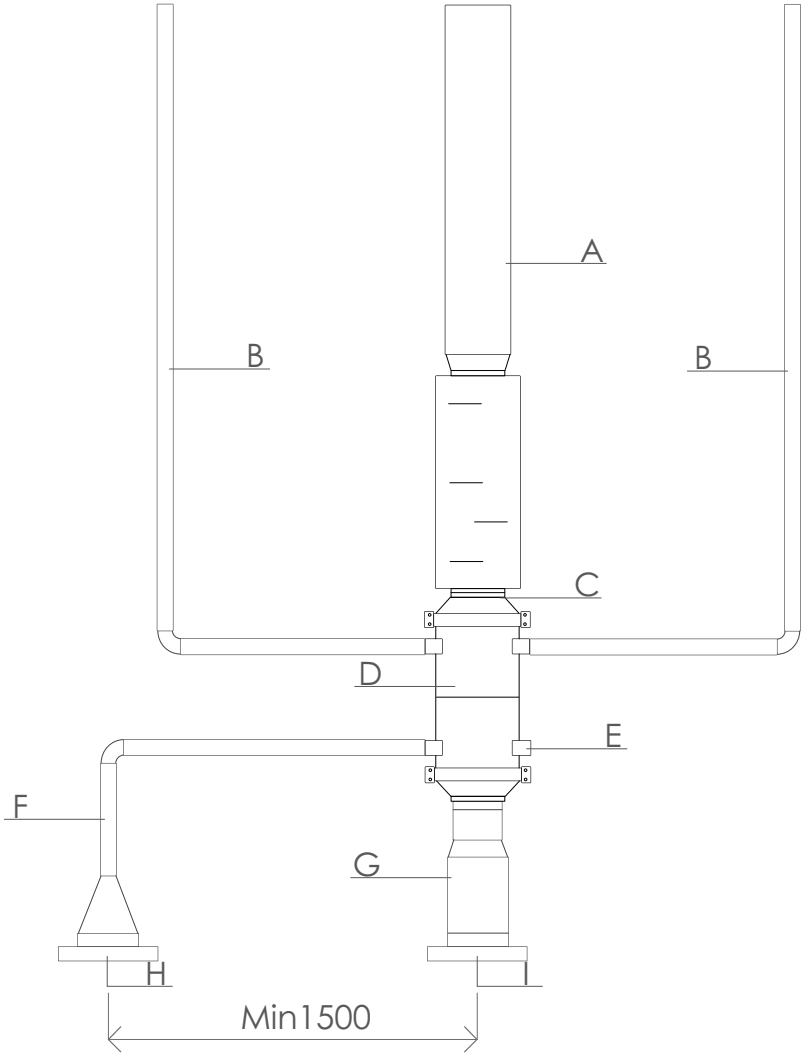

A-B4 Ø250 mm
B-P2 204x60 mm
C-Install flexible insertion Ø200 mm
D-PRANA -340S
E-Insert plug 204x60 mm
F-B3 204x60 mm
G-P1 Ø200/250 mm
H-External grille B3
I-External grille P1

Duct connection diagram. 1 connection.

PRANA-340S TYPE6 - Wall module PRANA-340S with the use of side spigots 204x60 mm for connecting a rectangular duct. The front center spigot of the system with a 204x60 mm is used to connect the supply duct in the room, while the rear center spigot, 200 mm in diameter, is used to connect the exhaust air duct from the room;

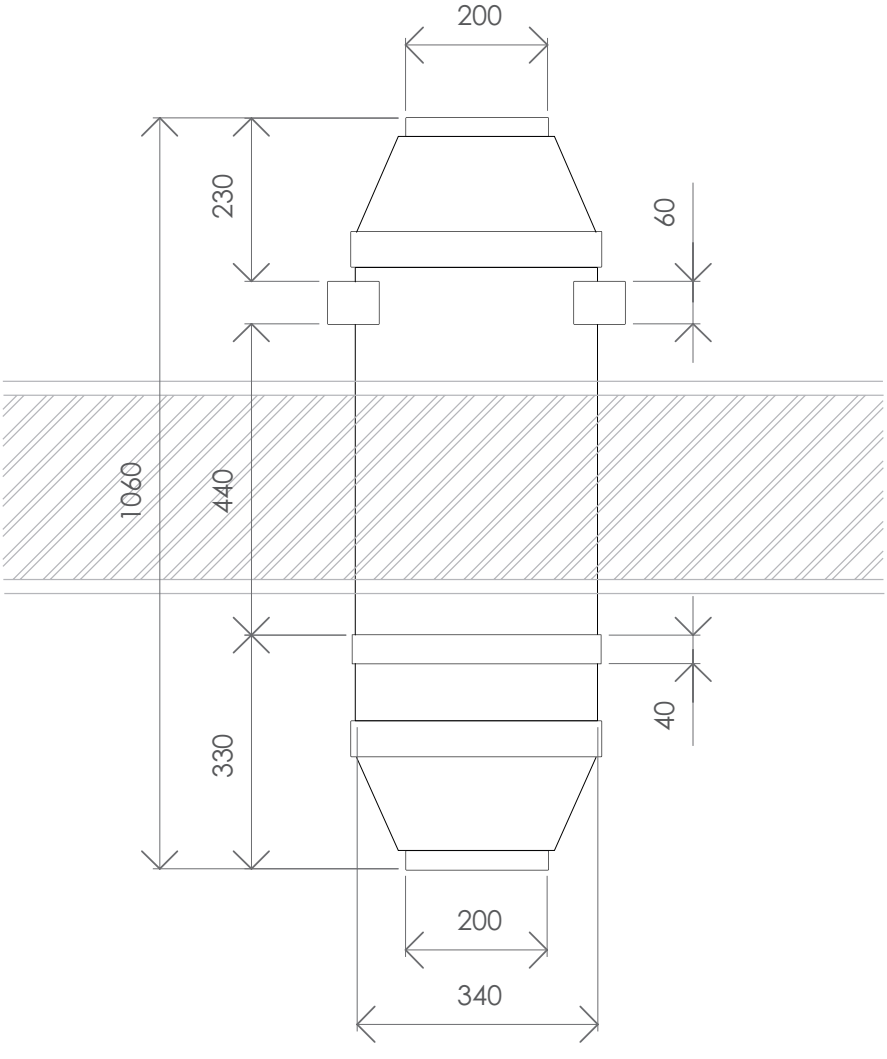

Main dimensions. Top view.

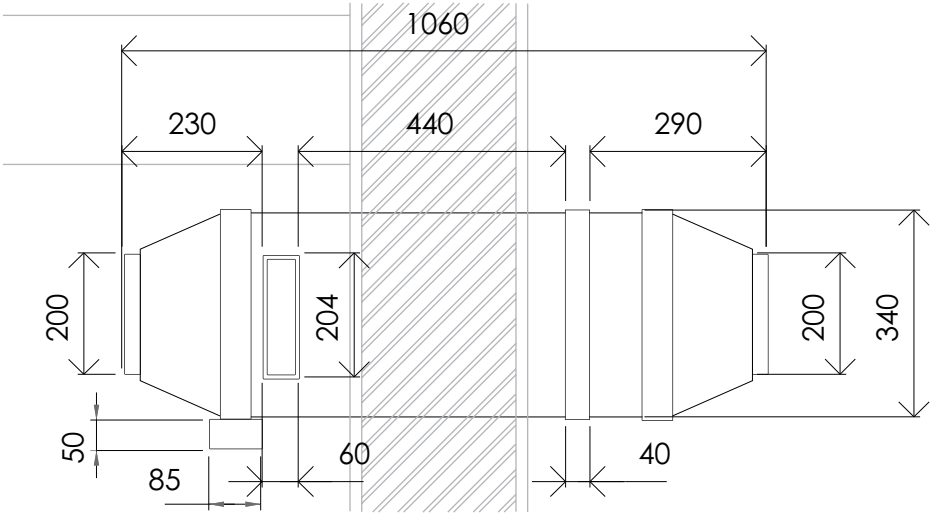

The main dimensions. Side view.

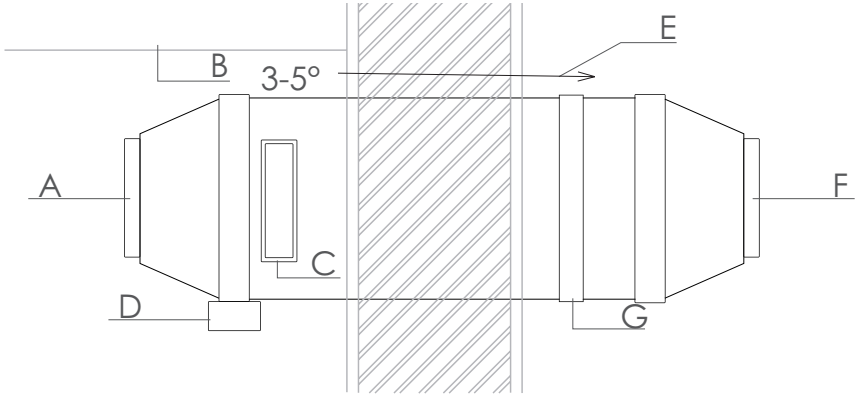

A-Inflow of air into the room. Ø200 mm
B-Building ceiling
C-Energy from the room 204x60 mm
D-Terminal box
E-Ensure slope towards street
F-Exhaust air outlet to the street Ø200 mm
G-Condensate drain. Outdoor air intake.Slit 40 mm

System connection assignment. Side view.

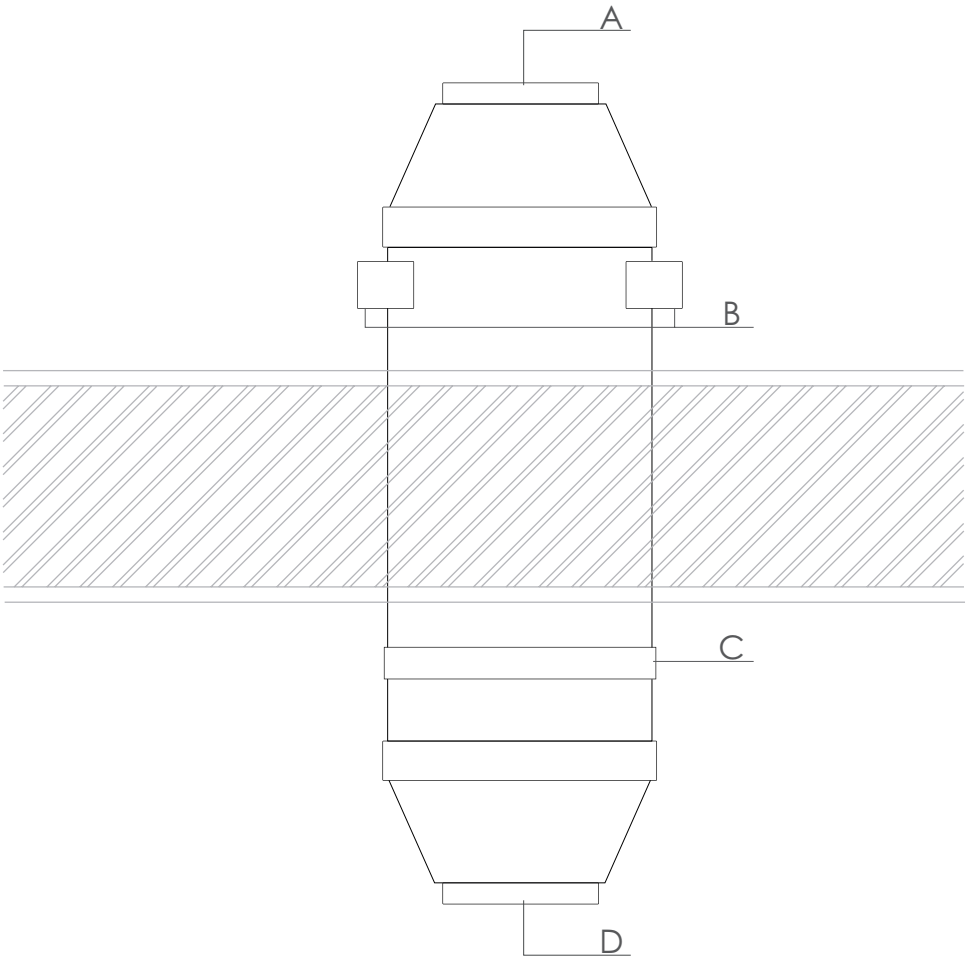

A-Room air inlet. Ø200 mm
B-Intake from the room grid 40 mm
C-External air intake. Slit 40 mm
D-Extraction of exhaust air to the street Ø200 mm

Assignment of connections of the system. Top view.

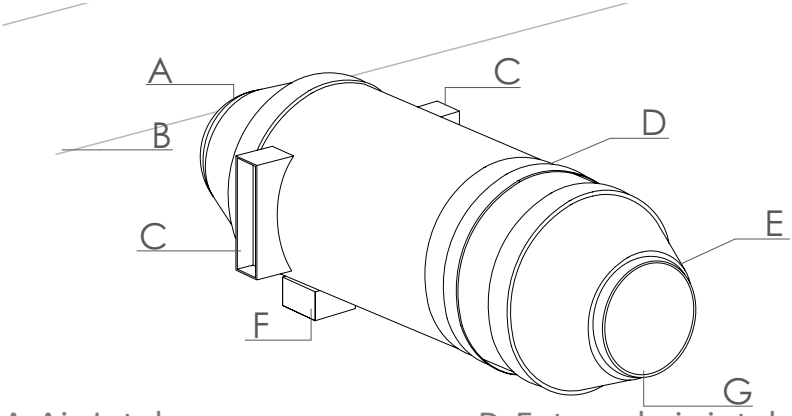

A-Air Intake.
Ø200 mm
B-External wall
C-Air intake from
Ø200 mm

D-External air intake Ø200
mm. Slit 40mm
E-Ensure the slope
F-Terminal box
G-Extract air outlet to the
street Ø200 mm towards the
street

Assignment of system connections. Isometric diagram.

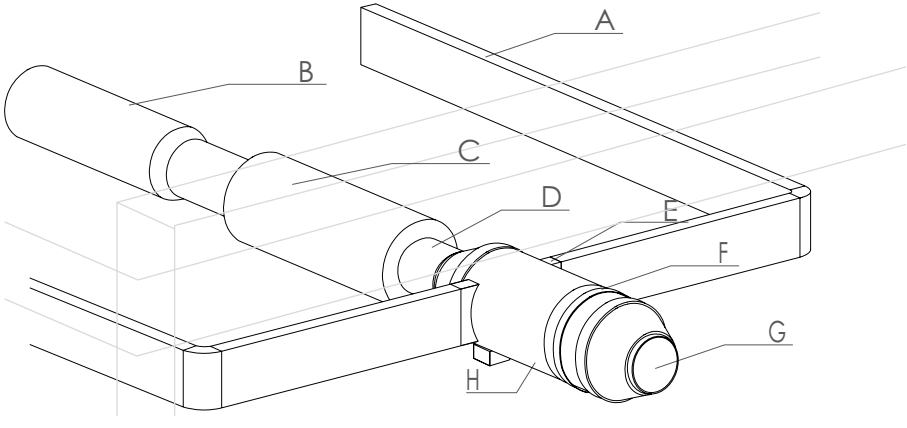

A-B4 204x60 mm
B-P2 Ø250 mm
C-Muffler Ø200/250 mm
D-Installation of flexible
insertion Ø200 mm

E-Insert plugs
F-PRANA -340S
G-B3 Ø200 mm
H-П1 P1 Slit 40 mm
204x60 mm

Assignment of system connections. Top view.

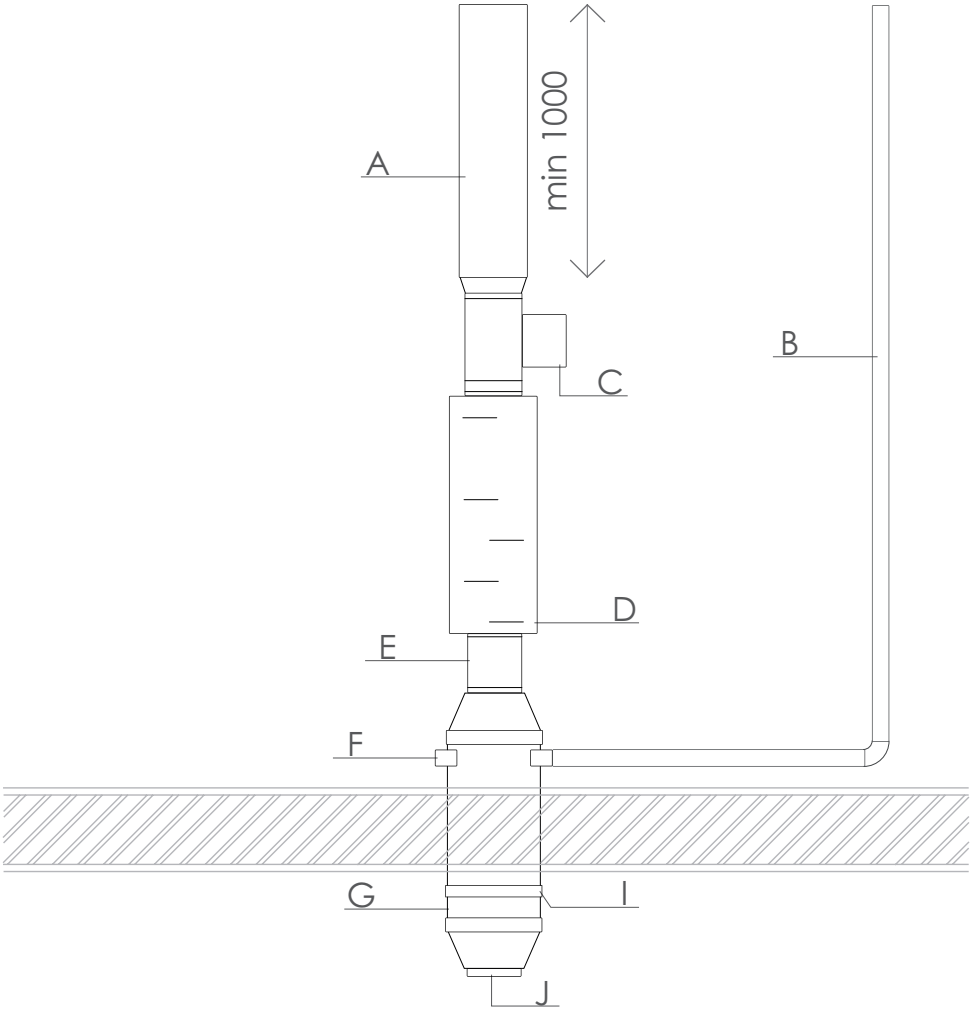

A-P2 Ø250 mm
B-B4 204x60 mm
C-Electric heat exchanger Ø200/250 mm
D-Muffler Ø200/250 mm
E-Insert the flexible duct Ø200 mm
F-Insert blanking plugs 204x60 mm
G-PRANA -340S
I-P1 slot 40 mm
J-B3 Ø200 mm

Recommended duct connection diagram.
1 connection.

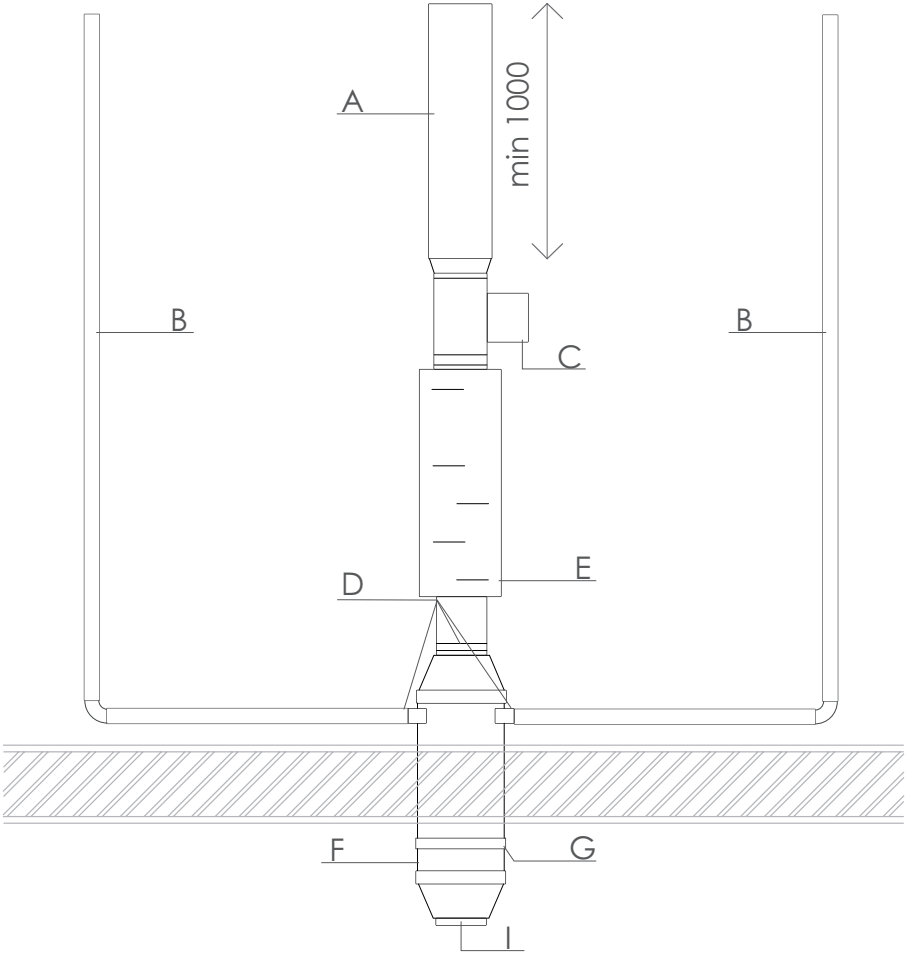

A-P2 Ø250 mm
B-B4 204x60 mm
C-El. duct heater Ø200/250 mm
D-Install flexible Ø200/250 mm flexible inserts
E-Muffler Ø200/250 mm
F-PRANA - 340S
G-P1 Slot 40 mm
I-B3 Ø200 mm

Duct connection diagram. 2 connections.

PRANA-340S TYPE7 - Wall module PRANA - 340S without using side spigots for duct connection, air intake is made through a 40 mm wide slot, along the outside diameter of the casing.

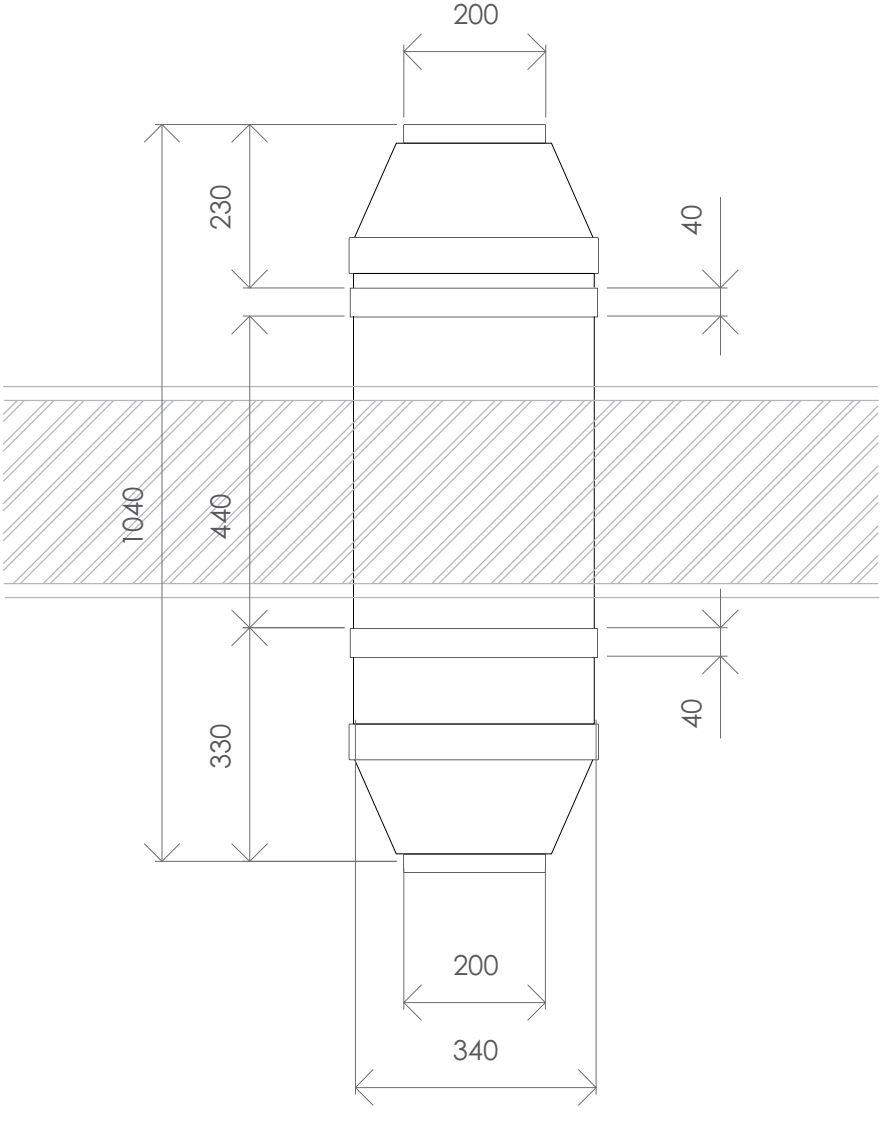

Main dimensions. Top view.

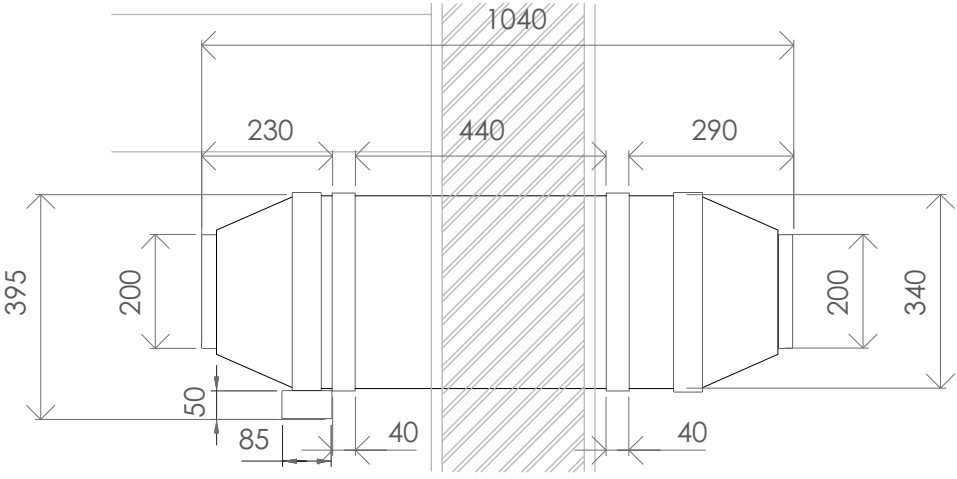

The main dimensions. Side view.

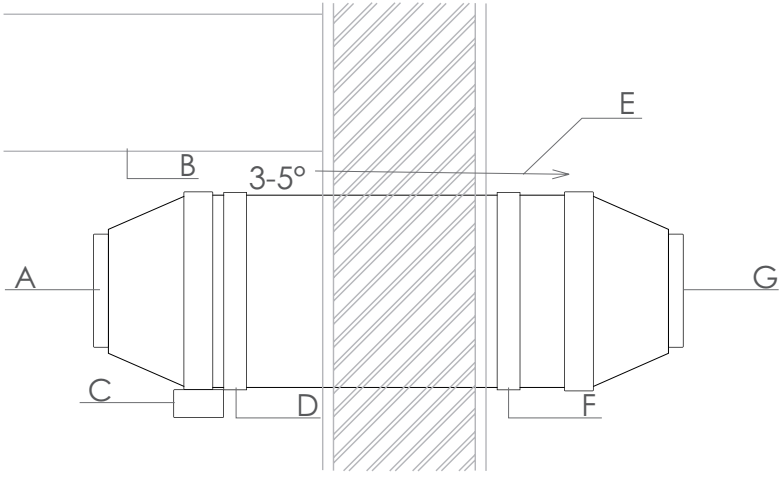

A-Air inlet into Ø200 mm
B-Building ceiling
C-Terminal box
D-Energy from room.
Slit 40 mm

E-Ensure slope towards street side
F-Outdoor air intake.
Slit 40 mm
G-Exhaust air discharge to the street Ø200 mm

Assignment of system connections. Side view

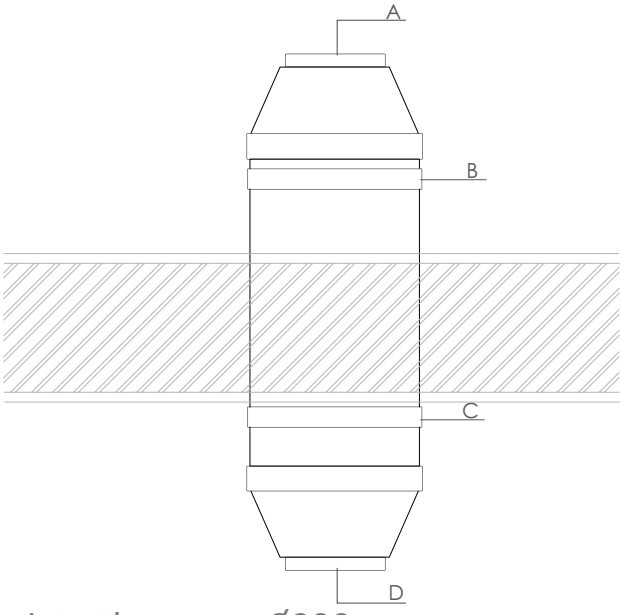

A-Air Intake into the room. Ø200 mm
B-Intake from the room 40 mm grid
C-External air intake Slit 40mm
D-Exhaust air outflow to the street Ø200 mm

Assignment of connections of the system. Top view.

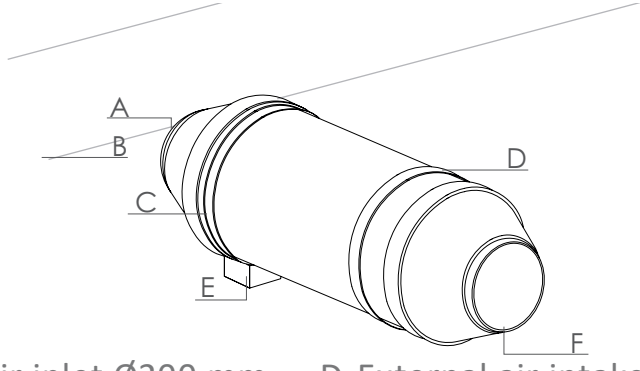

A-Room air inlet Ø200 mm
B-External wall
C-Air intake from room. Slit 40mm
D-External air intake. Slit 40mm
E-Terminal box
F-Exhaust air outlet to the outside Ø200 mm

Purpose of system connections. Isometric diagram.

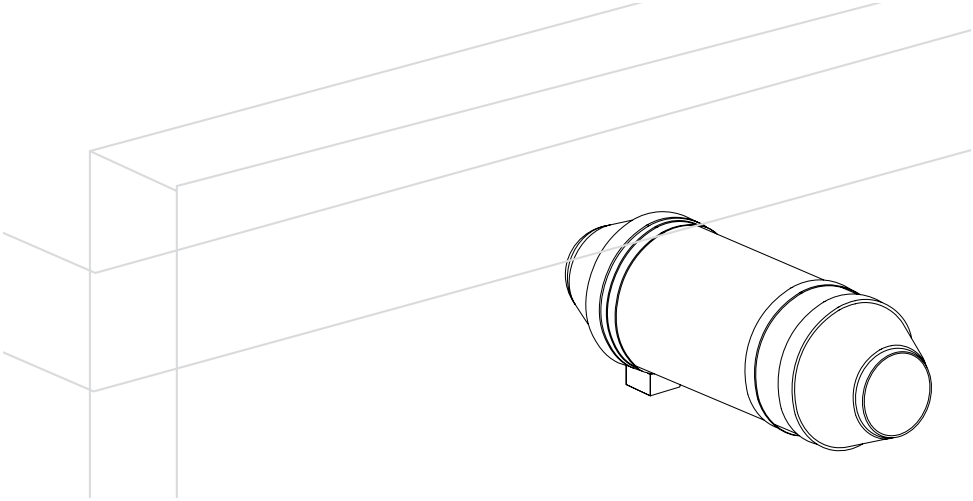

External layout. Isometric diagram.

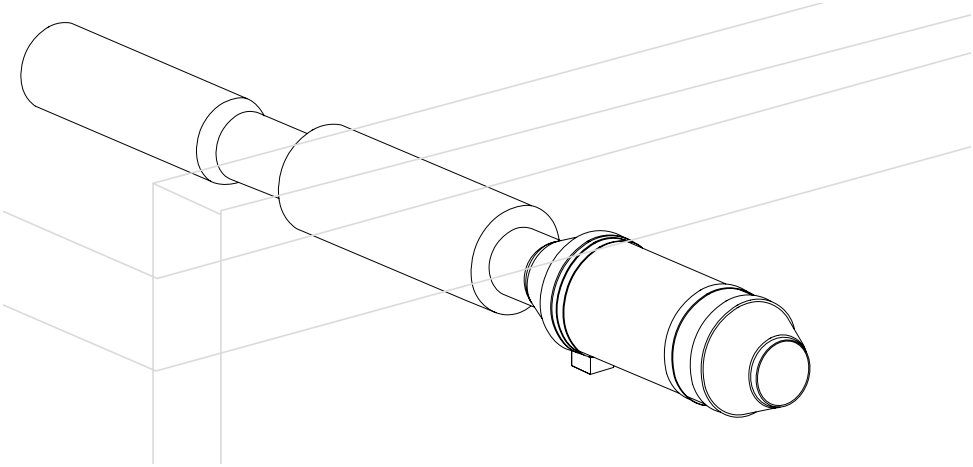

Placement of ducts in the wall system.
Isometric diagram.

MODEL RANGE: PRANA 2022®